GFS6013 TABLE

A	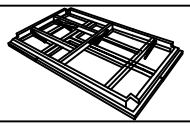	1PC	D		8PC
B	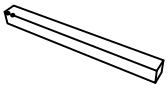	4PC	E		1PC
C	M6*25	8PC			

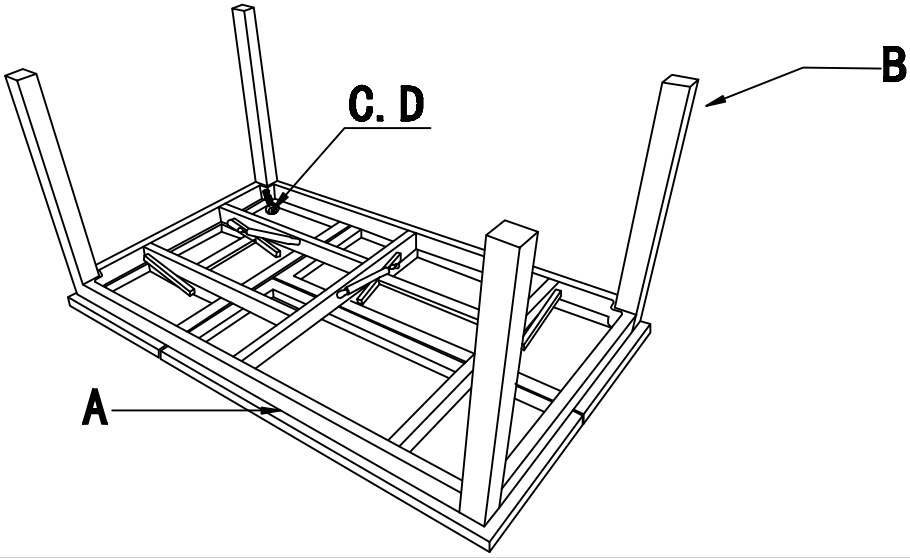

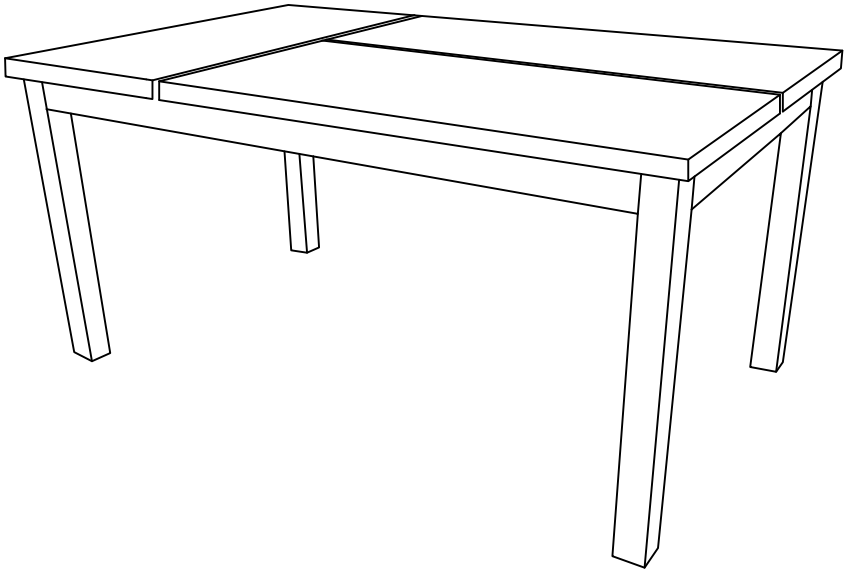

DO NOT TIGHTEN SCREWS UNTIL FULLY ASSEMBLED